18W Single Output Switching Power Supply

LPHC-18 Series

Features

- 180-264VAC input only
- Fully encapsulated with IP67 level
- Protections: Short circuit / Overload / Over voltage Over temperature
- Cooling by free air convection
- Pass LPS
- 100% full load burn-in test
- Suitable for LED lighting and moving sign applications
- High reliability / Low cost
- 2 years warranty

LPS IP67 CE

Specification

	MODEL	LPHC-18-350	LPHC-18-700
OUTPUT	DC VOLTAGE	48V	25V
	DC VOLTAGE RANGE	6 ~ 48V	6 ~ 25V
	RATED CURRENT	350mA	700mA
	RATED POWER	16.8W	17.5W
	RIPPLE & NOISE (max.) Note.2	300mVp-p	250mVp-p
	VOLTAGE TOLERANCE Note.3	±5.0%	
	LINE REGULATION	±1.0%	
	LOAD REGULATION	±3.0%	
	SETUP, RISE TIME	3600ms, 100ms / 230VAC	
	HOLD UP TIME (Typ.)	20ms / 230VAC at full load	
INPUT	VOLTAGE RANGE	180 ~ 264VAC	
	FREQUENCY RANGE	47 ~ 63Hz	
	EFFICIENCY (Typ.)	80%	80%
	AC CURRENT	0.3A / 230VAC	
	INRUSH CURRENT (max.)	COLD START 50A / 230VAC	
	LEAKAGE CURRENT	0.25mA / 240VAC	
PROTECTION	CURRENT LIMIT Note.4	±5% rated output current – Protection type : Constant current limiting type	
	OVER VOLTAGE	50.4 ~ 60V	28.75 ~ 33.75V
		Protection type : Shut off o / p voltage, clamping by zener diode	
	OVER TEMPERATURE	Tj +170°C typically (U1) Detect on main control IC Protection type: Hiccup mode, recovers automatically after temperature goes down	
ENVIRONMENT	WORKING TEMP.	-30 ~ +70°C (Refer to output load derating curve)	
	WORKING HUMIDITY	20 ~ 90% RH non-condensing	
	STORAGE TEMP., HUMIDITY	-40 ~ +80°C, 10 ~ 95% RH	
	TEMP. COEFFICIENT	±0.2% / °C (0 ~ +50°C)	
	VIBRATION	10 ~ 500Hz, 2G 10min. / 1cycle, period for 60min. each along X, Y, Z axes	
SAFETY & EMC (Note.5)	SAFETY STANDARDS	Design refer to UL1310 Class 2,TUV EN60950-1, EN61347-2-13, CAN / CSA C22.2 No. 223-M91, IP67 approved	
	WITHSTAND VOLTAGE	I / P-O / P:3KVAC	
	ISOLATION RESISTANCE	I / P-O / P:>100M Ohms / 500VDC / +25°C / 70% RH	
	EMI CONDUCTION & RADIATION	Compliance to EN55022 (CISPR22) Class A	
	HARMONIC CURRENT	Compliance to EN61000-3-2,-3	
	EMS IMMUNITY	Compliance to EN61000-4-2,3,4,5,6,8,11; ENV50204, EN55024, Light industry level, criteria A	
OTHERS	MTBF	1200.6K hrs min. MIL-HDBK-217F (+25°C)	
	DIMENSION	140*30*20mm (L*W*H)	
	WEIGHT	0.175Kg	
	ARTICLE No.	8110-00003	8110-00004

Note

1. All parameters NOT specially mentioned are measured at 230VAC input, rated load and +25°C of ambient temperature.
2. Ripple & noise are measured at 20MHz of bandwidth by using a 12" twisted pair-wire terminated with a 0.1uf & 47uf parallel capacitor.
3. Tolerance : includes set up tolerance, line regulation and load regulation.
4. Derating may be needed under low input voltage. Please check the derating curve for more details.
5. The power supply is considered a component which will be installed a final equipment.
   The final equipment must be re-confirmed that it still meets EMC directive

LPHC-18 Series

18W Single Output Switching Power Supply

Mechanical Specification

Unit: mm

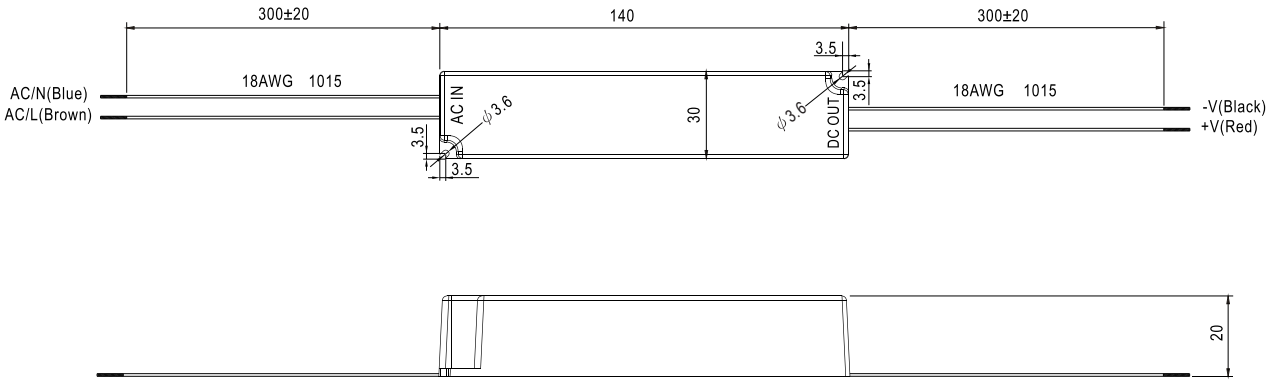

Block Diagram

fosc : 60KHz

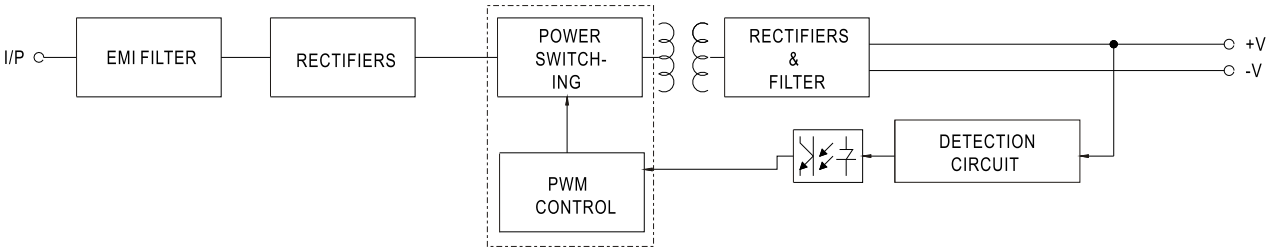

Derating Curve

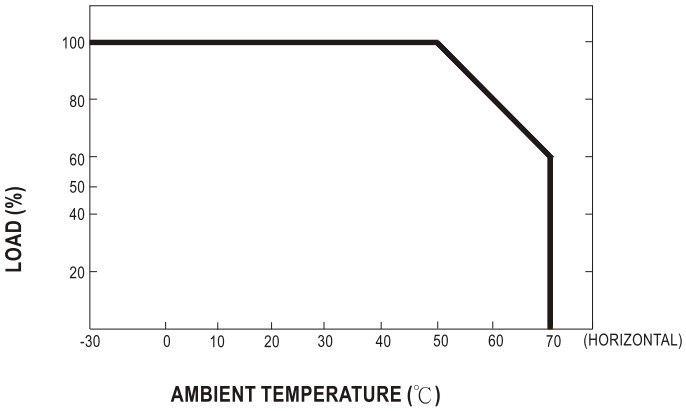

Static Characteristics

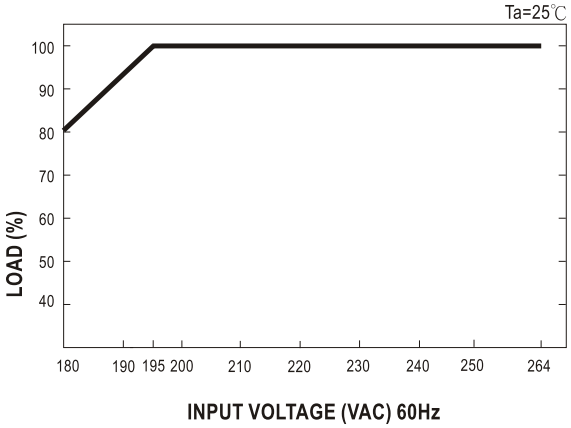

m.a.l.
Effekt Technik GmbH

Tromagstraße 1
D - 36179 Bebra

Telefon
+49 (0) 6622 91388-0

Telefax
+49 (0) 6622 91388-18

info@mal-effekt.de
www.mal-effekt.de

m.a.l. modern.art.of.light.